AMT-3 AMTOR/ RTTY TERMINAL UNIT

USER MANUAL

CONTENTS

CONTENTS

FOREWORD

The AMT-3 is a third generation microprocessor controlled AMTOR and RTTY radio communication terminal from ICS. We manufactured the first complete Amtor terminal unit ever to be built.

If you will use the associated free IBM-PC driver software (or other driver programs which are subsequently developed), you will not need to be familiar with a lot of the instructions given in this manual. Only the initial sections, covering installation and set-up, will need to be studied. From that point on, refer to the driver software user manual, or ON SCREEN menus and HELP messages for instructions, although information in the remainder of this manual may be needed if problems arise.

With care in installation and proper attention to the connection and screening of leads, the AMT-3 will provide many years of reliable service. Most modern HF radio transceivers can be used with the AMT-3 successfully. However, some older radio equipment may need some modification to shorten transmit/receive switching times. We keep a register of those modifications that we know of. Please call us if we can help you in this respect.

WARNING

Do not transmit at full power in FEC or RTTY modes for long periods, unless you know that the transmitter is rated for 100 percent duty cycle operation at full power. Some SSB transmitters are not, and it would be wise in these cases to reduce the power output. The duty cycle of ARQ is never higher that 47 percent, so this de-rating will probably not be needed when working ARQ.

SPECIFICATION

POWER SUPPLY

11.0-16.0 Volts at 500 mA

MODES OF OPERATION

FEC receive; FEC transmit; ARQ transmit/receive; ARQ/FEC combined standby; RTTY receive; RTTY transmit; ARQ listen; Morse code (CW) identification.

TRANSCEIVER INTERFACE

RECEIVER INPUT

Input level: . . . . . .10mV rms min.
Input bandwidth: 300Hz
Centre frequency: 2210Hz

TRANSMITTER OUTPUT

Output level: . . . . . .20-400mV rms
Output frequencies: 2295/2125Hz
Transmit/receive switch: . . .30v max receive,
. . . . . .100mA max transmit
FSK keying : . . . . . .30v/100mA max
SCAN control: . . . . . .30v/100mA max

TERMINAL INTERFACE

RS232 Serial transmission rate: 1200/300 bps
Data format: . . . . . .7 data bits
Parity: . . . . . .send 0,
. . . . . .receive don't care
Stop bits: . . . . . .send 1,
. . . . . .receive 1 or more

INTERNAL BUFFER STORES (Characters)

Send: . . . . . .4,000 (approx)

Receive : . . . . . 4,000 (approx)

PHYSICAL

Dimensions . . . . . 25x135x160 mm
Weight . . . . . 0.8 kg
Temperature . . . . . +5 to +35°C

INTRODUCTION

The AMT-3 connects between a radio transceiver and a computer or computer terminal. Text data is passed to and from the AMT-3 by means of a serial RS232 interface. The computer or terminal must be equipped with an RS232 interface operating at either 300 or 1200 bps.

The unit converts text entered from the terminal into patterns of audio tone signals which are transmitted over the radio link. Audio tone signals received over the radio link are similarly converted back to text data and passed to the terminal. The AMT-3 controls the change-over of the radio between transmitting and receiving, and in AMTOR ARQ mode, it automatically handles the necessary error detection and correction protocols.

Three methods of coding are available within the AMT-3. These are:-

- RTTY, in which the ITA2 code alphabet is used, with no error-detection or correction.
- FEC, in which the CCIR-476 code alphabet is used, with forward error correction.
- ARQ, in which the CCIR-476 code alphabet is used with full error-detection and correction.

In FEC and ARQ modes, the AMT-3 supports an extended character set in which the lower case letters a-z are included. The transmission of lower case letters is done in such a way that they will appear in upper case on another Amtor unit which is not equipped with this feature.

In ARQ mode, the AMT-3 supports an error reduction technique which, if enabled, considerably reduces the residual error rate of the 3:4 ratio error detecting code as defined in the CCIR specification. This is done in a way which is fully compatible with other implementations of this specification.

INSTALLATION

The AMT-3 may be desk mounted, using the angled plate supplied. Alternatively, it may be mounted on a vertical surface using the keyhole screw slots situated on the rear of the unit.

Three connectors are located on the right hand side of the unit: A power connector jack, a 25 way RS-232 terminal connector, and a 9 way radio connector. Screened leads must be made up to interface to each of these connectors. The pin assignments ofthese connectors are as follows:-

Power Connector

This should be connected to a stabilised 12 volt DC supply. The centre pin of the connector is positive.

Radio Connector

Pin	Signal
1	Audio Input
2	Audio Output
3	FSK Output
4	Scan Output
5	PTT
6	Ground
7	Ground

The SCAN control line should be left unconnected at this stage. See the ADVANCED OPERATION section of this manual for its use in multi-channel operation.

RS-232 Connector

Pin	Signal
1	Ground
2	Data Input
3	Data Output
5	CTS
6	DSR
7	Ground
8	DCD

Although you may wish to use a personal computer with the AMT-3, the basic requirements are met with a simple dumb terminal.

In what follows, it is assumed that a either dumb terminal or a computer in a dumb terminal mode is being used. Reference will be made to keys by their ASCII names, such as ESCAPE and Control-A.

On some computers, such keys may not exist, in which case, reference should be made to the documentation provided with the computer or terminal program. If you are writing your own control program in Basic, you can create these codes with a CHR$ command. For example, ESC is CHR$(27).

SET UP

After connecting cables to the three sockets, there are some adjustments to be made to match the characteristics of the AMT-3 to the radio and terminal:-

Terminal speed

Decide whether the terminal is to operate at a data rate of 300 or 1200 bps. JP2, on the circuit board, is configured in the factory for 1200 bps operation. If it is required to operate the terminal on 300 bps, then JP2 must be moved from the 1200 to the 300 baud position before the AMT-3 is switched on. In practice, this means cutting the track on the top of the pc board, and re-linking from the centre to the opposite side.

FSK polarity

In the three transmission modes for which the AMT-3 is designed, there is an internationally-agreed convention for the polarity of the keying of the two tones which comprise the radiated radio-frequency transmission, so that all transmitting and receiving stations use the same polarity. However, the relationship between the keying polarity of the radio signal, and the keying polarity of the audio signals, may differ from one transmitter and receiver to another.

In the AMT-3, the keying polarities are set in the factory so that, with a radio transceiver operating in the LOWER SIDEBAND mode, the radio-frequency keying polarity is correct. If the radio must be used on UPPER SIDEBAND, then the AMT-3 keying polarities must be reversed. This can be done by using the POLARITY and SAVE commands described later in this manual. If the transmitter has it's own FSK keying input which can be driven from the FSK output of the AMT-3, then it may be neccesary to separately set the polarity of the transmitter keying so that it is different from the receiver polarity. The POLARITY command can cater for this situation.

At this point in the installation, the AMT-3 must be connected to the radio with which it will be operating, power should be applied to both the radio and the AMT-3, and the radio set up for use on the desired channel.

Receiver audio input level

With the receiver listening only to background noise on the desired channel, and the AMT-3 switched-on and in STANDBY mode (type STA), adjust RV5 (hole nearest radio connector) from minimum until a flickering patch of light is visible on the tuning display.

Transmitter audio level

If the transmitter is to be used in SSB mode using the audio output from the AMT-3, rather than in the FSK mode, then set up the transmitter for SSB mode, and enter the FEC command from the terminal. The AMT-3 will turn on the transmitter. Adjust RV3 (located in the centre of the circuit board) until the transmitter just reaches it's design power output level. Take care not to overdrive the transmitter.

Although the transmitter will have protection circuits to prevent damage due to overdrive, too high an audio input level will cause distortion of the tone signals, which will cause interference to other signals on adjacent channels. At the end of this test, turn the AMT-3 off.

Transmit changeover delay adjustment

In all transceivers, there is a short delay between keying the transmitter on, and the emergence of full power to the antenna. If no allowance were made for this delay, then the transmitter would not be radiating when the AMT-3 started to send encoded data. The AMT-3 has an internal software procedure to introduce a small delay for this purpose, and there are good reasons for setting this so that it is only just long enough to allow for the transmitter delay.

To set this adjustment accurately requires the use of an oscilloscope. However, the factory setting of 25mS will probably suffice for most transmitters. Refer to the ALIGNMENT section if it is suspected that the transmitter is too slow.

OPERATION

General

If you have purchased an AMT-3 specific software driver program for your computer, refer to the instructions with that program rather than following the operating instructions given here. In what follows here, it is assumed that a "dumb terminal" is being used to control the AMT-3. Reference will be made to certain keys on the terminal keyboard, such as "ESCAPE", "DEL", "Control-D" etc. If these names are not found on the terminal keyboard, refer to the terminal handbook to find the names by which these keys are designated on your terminal.

When first switched-on, the AMT-3 will be in STANDBY mode, ready to respond to any AMTOR, FEC or ARQ calls that it has been programmed to accept.

Pressing the ESCAPE key always brings the unit into the COMMAND mode. A ">" prompt is displayed on a new line on the terminal, and the CMD lamp on the AMT-3 will be lit. A command can now be entered. Some commands consist of only one word; others are followed by one or more parameters. These parameters may consist of numbers, letters, or text. Parameters so entered must be separated from the command word and each other by one or more spaces. You can use the DEL key to backspace in order to correct entry errors. The command is always ended by a RETURN key.

If you enter a command-word by itself, without any parameter, the AMT-3 will display a short message inviting you to enter the required parameter on a new line. If you enter only a RETURN, the command will be ignored. All the command words may be abreviated to their first three letters.

Some of the commands set up conditions in the AMT-3. Others enable or disable certain functions or switch the AMT-3 into operating modes. The first command is the HELP command. Entering HELP causes the unit to display a complete list of all the commands, together with a single-line description of their functions.

Set-up commands

ECHO

Each character entered from the terminal can be sent back to the terminal to be displayed as a typing aid. Apart from the advantage of this for entering and correcting commands, in ARQ mode the "echoed" text helps to indicate the progress of the transmission of the message over the radio link. Therefore the echo facility should nor-

mally be turned on. If this is done, and the terminal displays each character twice, (because the terminal also has an echo facility), then it should be turned off at the terminal. However, if this is not possible, or in certain advanced applications where the echo facility would cause problems, it can be turned off within the AMT-3.

The command word for this is ECHO, and it should be followed by 0 to turn the echo off, and 1 to turn it on. The factory setting is ON. Note that if lower case letters (a-z) are entered for transmission, they will be echoed as lower case, but converted to upper-case for transmission, since the AMTOR and RTTY alphabets have no lower-case characters. If any of the other ASCII characters that do not have equivalents in AMTOR or RTTY are entered, they will be neither echoed nor transmitted.

LINEFEED ADD

Some computer terminals and terminal programs do not have a separate LINEFEED key. However, the convention in RTTY and AMTOR transmission requires that a LINEFEED code is transmitted after every RETURN code at the end of a line. By enabling the LINEFEED ADD feature, the AMT-3 will transmit a LINEFEED code after every RETURN (or ENTER) code received from the terminal. The factory setting is OFF.

NEWLINE

Messages typed into the AMT-3 should, by convention, be formatted into lines not exceding 69 columns wide, separated by RETURN and LINEFEED codes. To provide a simple typing aid, especially where echoed text may be delayed due to a slow ARQ link, the AMT-3 has a feature which inserts the required RETURN and LINEFEED characters instead of the first space past the 60th column. This feature can be turned on and off with the commandword NEWLINE followed by the parameter 0 (off) or 1 (on). The factory setting is ON.

ERROR

If a code is received which cannot be interpreted due to corruption of the radio signal, the AMT-3 will send an ASCII control-code to the terminal replacing the corrupted character. The terminal computer can then act on this code by, for example, using it to display some chosen unique symbol to indicate the presence of the bad character. The "error-replacement code" can be chosen from the ASCII code-letters "Control-A" to "Control-Z", by entering the command word ERROR followed by the corresponding letter A-Z. The factory setting is CONTROL-Z.

DELAY

To set the delay, in mS, that the AMT-3 software will wait after turning on the transmitter before starting to send meaningful data, enter the command word DELAY, followed by the required time interval expressed in mS as a two-digit number between 01 and 99. Entering 00 will result in the delay being set to 100mS, the maximum available. See the SETUP and ALIGNMENT sections for further instructions on the use of this DELAY command. The factory setting is 25mS.

SELCAL

In order to respond to directed calls in ARQ mode from other stations, a 4-letter selective-call-code must be assigned. This will normally be derived from the first letter, and the last 3 letters of the station callsign. Enter SELCAL followed by the 4-letter group. Only the letters A-Z are valid within a selcal code. The factory setting is XXXX.

LOWER CASE AMTOR

In addition to the upper case letters A-Z defined in the CCIR specification, the AMT-3 can transmit lower case letters a-z to a similarly equipped station. This is done by using the one unused code in the TOR code set to toggle between upper and lower case. This feature is enabled with the LCA command. Transmitting lower case text to a station not equipped to process it properly will normally just result in upper case reception. In the event that the distant station responds in an unexpected way to the unused code, the LCA mode can be turned off. The factory setting is OFF.

THRESHOLD

To enhance the detection of corrupted received text in ARQ mode, the THRESHOLD parameter can be set to determine the level of corruption at which a block of received data is rejected. THRESHOLD can be set to values between 1 and 5, with 0 representing the OFF condition. High settings provide a moderate amount of improvement in error rate, with negligeable side effects, while a low setting results in a more stringent decision threshold. This gives a greater potential improvement in residual error rate, but at the expense of slowing down the transmission speed under poor conditions. A setting of 3 or 4 will give optimum results under most conditions. The factory setting is 0, which disables the feature.

BROADCAST

It may sometimes be desirable to inhibit reception of unwanted messages broadcast to all stations using FEC mode. The AMT-3 can

enable or disable the reception of broadcasts in FEC mode by the command BROADCAST followed by the parameter 0 or 1. The factory setting is ON.

POLARITY

As described in the SETUP section: If it is neccesary to change the polarity of the received or transmitted keying sense, this can be done with the POLARITY command, followed by two parameters. The first of these, 0 or 1, sets the receive polarity. The second, (again 0 or 1), sets the transmitting polarity. The 0 value is that which will result in conventional polarity if an LSB radio transceiver is in use. The 1 value would be correct for a USB radio. The factory settings are both 0.

TIMEOUT

When the AMT-3 is attempting to establish, or re-establish, an ARQ link, it tries to synchronise with the distant station for a period which can be chosen by the user. At the end of the time out period, the unit will revert to STANDBY. The command TIMEOUT, should be followed by a two digit number representing the time in seconds. 00 corresponds to 100 secs. The factory setting is 30 secs.

BAUD

In RTTY, several different data transmission rates are in common use. These include 45, 50, 75, and 100 bits-per-sec (bauds). To set the transmission and reception baud rate, enter the command-word BAUD, followed by a two digit number representing the baud rate. 00 sets 100 baud. The factory setting is 50.

CWS

When the AMT-3 sends an IDENT message in morse-code (CW), the speed can be set to any word-per-minute rate up to 100. Enter the command-word CWS followed by a two digit number representing the desired speed in words per minute. 00 sets 100 wpm. The factory setting is 25.

XFLOW

In situations where a computer is connected to the AMT-3 and the possibility exists for messages to temporarily overflow the buffer, the AMT-3 can implement the standard Xon/Xoff flow control protocol. The command XFLOW followed by 0 or 1 enables or disables this feature. See the ADVANCED OPERATION section for further information regarding the use of this feature. The factory setting is OFF.

IDENT

In order to identify the station over the radio link on ARQ, FEC, RTTY, or using morse code, a short message of 28 characters or less, can be stored for transmission when required. To set this identification message, enter the command word IDENT, followed by a space. After the space, enter the desired message. The message will be truncated to 28 characters if it is too long. The message must not contain control codes such as RETURN or LINEFEED. When this message is transmitted on ARQ, FEC, or RTTY, it is always preceded and followed by a RETURN/LINEFEED pair. The factory-set message is the software copyright message.

WRU

Transmission of the IDENT message can be remotely triggerred by the distant station when operating in ARQ. The distant station sends a special "Who Are You" code. To enable or disable this function, enter WRU, followed by a 0 or a 1. The factory setting is OFF.

DISPLAY

All the settings described so far in this section can be displayed by using the command DISPLAY.

SAVE

All the above settings will remain set as long as the AMT-3 is switched on. However, the AMT-3 has a permanent memory into which parameters can be stored whilst it is switched off. To save current settings, enter the command SAVE. This operation takes a few seconds, during which a "wait" message is displayed on the terminal. A SAVE operation is automatically carried out whenever an AMT-3 is first turned-on with a new EPROM program or a new EPROM memory. In each case, the factory settings are saved.

RESET

The RESET command causes the parameters stored in the non-volatile memory to be loaded into the AMT-3 for current use. This occurs automatically each time the AMT-3 is switched on.

OPERATING MODE COMMANDS

Unlike the previous commands, which always return to COMMAND mode, those that follow are actual operating commands. These carry out the main operations of the unit.

STANDBY

This command causes the AMT-3 to enter AMTOR standby. This always occurs automatically at switch-on. In this condition, if the BROADCAST command is enabled, the unit will receive any FEC broadcast heard. If the station selcal code has been entered (using the SELCAL command), then it will also respond to an ARQ call from a distant station using this selcal. If this happens, the AMT-3 will begin to key the transmitter in reply to the calling station. The tuning display will change from continuous to "strobed" in time with the incoming signal.

The STANDBY lamp will be replaced by the RQ lamp until the distant station has received the reply, and then the TRAFFIC, or IDLE lamp will light to indicate that contact has been established and text can be exchanged. This is described further below.

ARQ

This is the command which initiates an ARQ link with another distant station. The selcal code of the other station must be known. Enter the commandword ARQ, followed by the selcal code. The PHASE lamp will light to indicate that the AMT-3 is attempting to synchronise the link. If the call is not successful within the time-out set by the TIMEOUT command, the unit will return to STANDBY.

If a link is established within this period, then (as with an incoming ARQ call), the TRAFFIC or IDLE lamps will light to indicate that text may be exchanged between the two stations. Whichever way the contact started, the station whose SEND lamp is on, will be sending text (if any) to the other. The station who initiated the link will be sending first. The sending station can pass the transmission to the other by sending the text sequence "+?", or by keying CONTROL-C.

Alternatively the station receiving can break in by keying Control-B. In either case, the OVER lamp will light briefly during the change over. It is permissible to continue entering text whilst receiving. Such text will be stored in the send buffer until the station next begins sending.

If the radio link is poor, the rate of transmission may be slowed by error correction sequences. These are indicated either by the ERROR lamp if the error occurred in the received signal, or the RQ lamp if the error occurred in the transmitted signal,received at the distant station. In either case, the transmission will pause whilst the error is corrected. There will also be a pause in the echoing of transmitted text, if enabled. If a continuous ERROR or RQ occurs for 15 secs, then the AMT-3 will assume that the link has lost synchronisation and will attempt to restart the link. The distant station will always do the same, at the same time.

In this condition, the PHASE lamp will light at both ends of the link. The original-calling station will send the ARQ selcal code once again to try to re-synchronise the link. The originally called station will initially appear to have stopped but, with the PHASE lamp lit, it will also be attempting to re-synchronise. If this operation is successful, the link will continue as before, with an automatic change of direction if required to re-instate the original sending direction. No text will be lost during a PHASE operation, and neither operator need take any corrective action. Text may continue to be entered at either end, subject to the limit of the respective send buffer size. If the PHASE operation fails to re-synchronise the link within the TIMEOUT period, both stations will revert to STANDBY mode and any unsent text at either end will be lost.

If the AMT-3 is being used as part of an unattended system, it may be desirable for the distant station to remotely trigger the sending of the IDENT message. The AMT-3 may be set to respond to the internationally agreed automatic identity-request code (who-are-you), using the WRU command. If this facility is turned on, and a "who-are-you" signal is received, the AMT-3 will automatically change to transmit. It will send the IDENT message, and then change back to receive. If the WRU function is turned off, then reception of a WRU code will simply result in a $ symbol being displayed on the terminal.

To request such an automatic identity from the distant ARQ station, enter a $ from the terminal. If the distant station has a WRU facility, then it will change the link over, send it's identity, and then change back again. If the distant station has no WRU facility, then there will be no response. It is also possible to send one's own IDENT message to the distant station by entering Control-H.

To end the ARQ link, enter Control-D. If the station is sending, or when the station is next sending, and when any remaining text has been transmitted from the send buffer, the link will close, and both stations will revert to STANDBY. Control-I can be entered at any time during an ARQ link or when in STANDBY, and this will cause the AMT-3 to send it's IDENT message in morse-code (by frequency-shift of the carrier) as soon as it reverts to STANDBY.

LISTEN

It is not possible to use the ARQ mode to monitor other ARQ links which may be receivable. The AMT-3, however, has a special facility to permit this. On entering LISTEN, the PHASE lamp will light whilst the AMT-3 is attempting to synchronise with the distant ARQ signal. When this has been achieved, this will be replaced by either the TRAFFIC or IDLE lamp. The ERROR lamp lights if the received signal is corrupted, and the RQ lamp lights if the distant station is repeating text or transmitting a selcal code. In this case, the selcal code being sent will be displayed on the terminal. If synchronisation is lost, the unit will attempt to re-synchronise after 15 secs of continuous ERROR. It can also be forced to do so by entering Control-B. To leave LISTEN mode, press ESCAPE.

FEC

To send an FEC broadcast transmission, enter the FEC command. The AMT-3 will turn on the transmitter. Text can then be entered from the terminal. Control-H can be used to insert the IDENT message into the text. Control-C or Control-D will terminate the message when any remaining text in the send buffer has been sent, returning the unit and any distant receiving stations to STANDBY. As with ARQ, if Control-I is entered at any time during an FEC transmission, the AMT-3 will send the CW IDENT message as it returns to STANDBY.

RTTY

Although AMTOR is now the most popular amateur text transmission mode, there is still a significant amount of activity using the older non error correcting RTTY system. The AMT-3 is capable of operating in this mode, at baud rates up to 100. The baud rate is set using the BAUD command.

After ensuring that the baud-rate is set to the desired figure, enter the command-word RTTY. The AMT-3 will enter RTTY receive mode. Since the RTTY code system has no inherent error correcting capability, the AMT-3 is unable to distinguish between an RTTY signal and noise so, if the receiver is not tuned to an RTTY signal, random characters will be displayed on the terminal. The TRAFFIC, IDLE, and ERROR lamps will then be lit at random. On tuning in an RTTY signal of the correct baud-rate and keying polarity, the TRAFFIC or IDLE lamps will be lit as appropriate.

To change to RTTY transmit, enter Control-B.The send lamp will light, the AMT-3 will turn on the transmitter, and any text entered from the terminal (or previously entered whilst in RTTY-receive), will be transmitted.

As with ARQ and FEC, Control-H may be used to insert the IDENT message. Control-C or Control-D will return the unit to RTTY receive after any remaining text in the send buffer has been sent. Control-I can be used to send the CW IDENT message when in RTTY receive. Enter ESCAPE to leave RTTY mode.

TEST MODE COMMANDS

There is one more command available in the AMT-3, which is neither a setup nor an operational command. This is the TEST command. Six different aspects of the alignment and testing of the AMT-3 are covered by these tests. Some run continuously until ESCAPE is entered. Others carry out the test then return to command mode. To carry out any of these tests, follow the TEST command by a number between 0 and 5, as follows:

TEST 0

By linking the audio output to the audio input, the receive centre-frequency may be aligned accurately to that of the transmitted tones. When TEST 0 is entered and this link is made, the tuning display should show a steady band of light. The transmit tones are rapidly keyed from one tone to the other.

Either the RQ or ERROR lamp will be lit. RV4 should be adjusted until both these lamps are flickering. That is, to the point where one lamp is on the point of going out and the other is on the point of coming on. End this test by entering ESCAPE. For this test to be meaningful, the transmit tones should have been aligned correctly first, using TEST 1 and TEST 2.

TEST 1

To align the lower transmit tone, enter TEST 1, and connect the internal JP1 link on the AMT-3 printed circuit board. The SEND lamp will flash continuously while JP1 is linked. The terminal will repeatedly display the frequency of the tone. Adjust RV1 slowly until the reading is 2295 Hz. Remove JP1 and enter ESCAPE to end this test.

TEST 2

To align the upper transmit tone, enter TEST 2, and connect the internal JP1 link on the AMT-3 printed circuit board. The SEND lamp will flash continuously while JP1 is linked. The terminal will repeatedly display the frequency of the tone. Adjust RV2 slowly until the reading is 2125 Hz. Remove JP1 and enter ESCAPE to end this test.

TEST 3

This test checks all the front panel lamps by illuminating each of them in turn.

TEST 4

The internal RAM, which is used for the send and receive buffers, is tested. The result is displayed on the terminal. This test returns to command mode automatically.

TEST 5

The EPROM program memory is tested and the checksum is displayed in hexadecimal format. To make use of this test, it is advisable to make a note of this checksum when the unit is first installed. If a

problem is suspected, the test can be repeated to see if the checksum is the same. If it is not, then a problem can be suspected in the EPROM. Different versions of EPROM will have different checksums.

CONTROL CODES

Some of these control codes have been mentioned already, but there are more to be described. To re-cap, a "control code" is usually sent from the terminal by holding down a key called CONTROL or labelled CTRL, whilst keying one of the letter keys A-Z. In this section, all active control codes are listed and described:

Control-B

In ARQ mode, Control-B can be used to "break-in", that is, to change the link from receive to transmit. In FEC this code is not used. In RTTY it is used to change from receive to transmit. In LISTEN, it will force the unit to resynchronise without waiting for the 15 second error timeout.

Control-C

In ARQ, this code is used to send a +? group to change the link over from transmit to receive. It is also used to end an FEC or RTTY transmission.

Control-D

This code terminates an ARQ link. Like Control-C, it also ends FEC and RTTY transmissions.

Control-E

This code would normally only be sent to the AMT-3 from an "intelligent" computer program. It causes the AMT-3 to return a non-text code which gives information about the status of the AMT-3. See the ADVANCED OPERATION section for further information.

Control-G

A "bell" code is sent over the radio. Note, however, that the terminal echo, if enabled, will not be a "bell" code, but an asterisk (*)

Control-H

Enter this code to send the IDENT message whilst in ARQ, FEC-transmit, or RTTY. This key causes the IDENT message to be loaded into the send buffer as if it had been typed in.

Control-I

Control-I can be entered in ARQ, FEC, or RTTY modes and will cause the AMT-3 to send the IDENT message in morse code (CW) when the AMT-3 returns to STANDBY or RTTY receive. If it is already in STANDBY or RTTY-receive when CONTROL-I is entered, it will send the CW-IDENT immediately.

Control-L

To turn the ECHO function on or off whilst in contact without having to use the ECHO command. Use Control-L to "toggle" the ECHO function to the opposite condition.

Control-N

This toggles the NEWLINE function on or off during a contact, without having to break off to use the NEWLINE command.

Control-Q

This is the X-On control code. If the XFLOW function is enabled, it will cause text flow from the AMT-3 to the terminal to resume.

Control-S

This is the X-Off control code. If the XFLOW function is enabled, it will cause text flow from the AMT-3 to the terminal to stop.

Control-X

This code will clear any unsent text in the send buffer. It cancels the effect of any Control-B, -C, -D, -H, or -I codes which may not yet have been actioned.

DEL, ESC CODES

In addition to these single letter control codes, three other named control codes are applicable:-

DEL

Also known as the RUBOUT key, this code acts in two ways:

- In command mode it can be used to backspace over any erroneously-entered commandword or parameter, so long as the final RETURN has not yet been entered.
- In ARQ, FEC receive, and RTTY, DEL will cause the incoming ITA2 character-stream to be forced to the "letters" character-set.

ESCAPE

This code can ALWAYS be used to return to command mode. Although it has the effect of ending any transmission in progress, it should not normally be used in this manner. It may cause problems at the distant station.

OPERATING HINTS

AMTOR uses a set of 32 different codes for data transmission. Two of these are used to shift between one set of 30 letters, and another set of 30 figures and punctuation marks. The "shift" codes are automatically generated by the AMT-3. In most cases the user need not be aware of this. However, it sometimes happens that the received text appears with the wrong character set. If received text erroneously appears in "figures", a DEL code should be entered from the terminal. This forces the following text back to "letters".

The AMT-3 automatically sends an extra shift code at the start of every new line (and after a NUL character). This follows the traditional practice of the mechanical teleprinter operator. It is recommended that every transmission begins on a new line. This ensures that the distant station is both in the correct shift, and is starting to print at the start of a line.

In FEC mode, the distant receiver can only synchronise when the transmitting station is idling. The AMT-3 always begins a transmission with a period of idling for this purpose. Additional idles are inserted at regular intervals. This allows "late-comers" to synchronise after the start of the transmission. It also slows down the average transmission rate to that of the older mechanical teleprinters. If conditions are known to be poor, you should leave additional pauses to allow distant stations to tune in and synchronise. The common practice on RTTY of sending continuous strings of RYRYRY's, is actually counter-productive in FEC.

In AMTOR, a CQ call may only be made by using FEC. It is therefore common practice to announce one's own SELCAL code during an FEC CQ call. On ending the call, a station can then reply by initiating an ARQ link using your SELCAL code.

There are some conditions when ARQ contacts cannot be made at all, such as when the distance between the two stations is greater than about 25,000km. This can occur if the path is more than half way round the globe (long path), or is via a high orbit satellite.

There are some useful "tricks" that can be implemented using the send and receive buffers. Apart from typing ahead of the transmission speed whilst sending or receiving in ARQ or RTTY, it is also possible to enter text whilst in STANDBY.

This text will be transmitted to any caller on ARQ. Control-B, Control-C, Control-D, and Control-H keys can also be entered whilst in STANDBY, and will be actioned if an ARQ call is received. Though the XFLOW function is mainly of use in applications where a computer is used as the terminal (to prevent buffer overflow), it is possible (with XFLOW on) to enter an X-Off code from the terminal

keyboard if the terminal has to be used temporarily for another purpose. This prevents incoming traffic from being lost.

If the unit goes to STANDBY whilst there is received traffic in the buffer, then the TRAFFIC lamp will remain lit. When the terminal is again connected to the AMT-3, an X-On code will release this stored text to be sent to the terminal.

ADVANCED OPERATION

So far in this manual, it has been assumed that a dumb terminal has been used. However, many users may wish to take advantage of the extra power of their computers to perform more complex operations, including unattended operation. Several features of the AMT-3 facilitate this.

Error Replacement

The ERROR command described previously, shows how to set the AMT-3 so that a corrupted received character is replaced by a user defined code. The computer can be programmed to detect this code and either use it to display a suitable symbol or act in some other pre-determined way. Such corrupted received signals cannot occur in ARQ. They are sometimes received in FEC, and are often received in LISTEN and RTTY modes, where there is no error-correction. In RTTY, the error-replacement symbol occurs if the received signal has no stop bit, indicating a character synchronisation error. If there is no RTTY signal present, about half of the received characters will be corrupt in this way.

Status Byte

As described in the CONTROL CODES section, the terminal can send a Control-E code to the AMT-3. This causes it to return a single non text character indicating both the current mode of operation and the status of the link. Considering the status code as an 8-bit byte, then the bytes should be interpreted as follows. Bits 0, 1, and 2 indicate which of the status lamps are lit.

Bit	2	1	0	STATUS
	0	0	0	ERROR
	0	0	1	RQ
	0	1	0	TRAFFIC
	0	1	1	IDLE
	1	0	1	OVER
	1	1	0	PHASE
	1	1	0	not used
	1	1	1	NONE

Bit 3 indicates the state of the SEND lamp, that is, bit 3 will be 1 if the send lamp is on.

Bits 4, 5, and 6 indicate which of the MODE lamps are lit:

Bit	6	5	4	MODE
	0	0	0	COMMAND
	0	0	1	STANDBY
	0	1	0	ARQ
	0	1	1	FEC
	1	0	0	RTTY
	1	0	1	LISTEN
	1	1	0	CW IDENT
	1	1	1	not used

Although bit pattern 110 indicates that a CW IDENT is in progress, there is no corresponding lamp. No lamps are lit during a CW IDENT.

Bit 7 of the status code is always 1. This is in contrast to text characters from the AMT-3, where bit 7 is always 0. This enables the computer to distinguish between text characters and status bytes.

Flow Control

In order to prevent the send buffer from overflowing when sending long texts from the computer, traffic flow function can be turned on by entering XFLOW 1. With this on, if the send buffer gets close to being full, the AMT-3 will send the terminal a Control-S code (also known as the X-Off code). This tells the computer to stop sending text. The computer must, of course, be programmed to do this.

There is a 256-character margin between the point at which the AMT-3 sends Control-S and the "completely-full" condition. This should give plenty of time for the computer to respond. Subsequently when the buffer becomes empty, the AMT-3 will send Control-Q (also known as the X-On code). This tells the computer that it is safe to resume sending. Note that after sending Control-S, the AMT-3 will still actually accept input from the terminal. In particular it will accept control codes, including ESCAPE. On receiving an ESCAPE, the AMT-3 will always send a Control-Q to permit the computer to send commands.

The XFLOW function also performs a similar task in the other direction. If the computer sends a Control-S to the AMT-3, then traffic from the AMT-3 will stop and build up in the 4,000 character

receive buffer. The computer should do this when it may be temporarily unable to process the traffic. For example, due to a near-full condition of it's own input buffer. Due to the time taken to send the serial signals between the AMT-3 and the computer, it may emit up to 3 extra characters after the computer begins to send a Control-S before traffic stops completely.

A Control-Q from the computer will subsequently re-start traffic flow. Note that if the AMT-3 goes to STANDBY whilst there is still some traffic in the receive buffer, then the TRAFFIC lamp will remain lit. If so much traffic enters the receive buffer that it fills completely, any further FEC or RTTY traffic received will be lost. If an ARQ link is in progress when this happens, no further traffic will be accepted by the AMT-3.

ECHO/NEWLINE Toggle Control

You may wish to turn the ECHO and NEWLINE functions on and off under the control of the computer. This can be accomplished using the ECHO and NEWLINE commands. However, the Control-L and Control-N codes are available to toggle these functions on and off. These can be sent without having to break-away from a link in progress, as would be the case if the commands were used. The computer itself must then keep track of the state in which it has left these functions.

CONTROL-C Operation

In the CONTROL CODE section, it was stated that Control-C is used to send the +? group to change the link from send to receive. It is not exactly equivalent to entering a + and a ? from the terminal. If these characters are sent separately there is a (very small) possibility that one or other of the characters may be corrupted. The effect of this would be to prevent the change-over occurring, which could cause problems in a link where one or both stations are unattended. In the AMT-3, entering Control-C not only sends the +? group, but confirms that the link changes direction, re-sending +? if required. Therefore Control-C should therefore be used in preference to +? where accuracy of changeover is important.

Scan Control

In the INSTALLATION section, the SCAN control line was not described. This line is pulled low (on) when the AMT-3 is in STANDBY mode, and will go high (off) when it is about to synchronise to an FEC or ARQ signal. It will stay high whilst an FEC transmission is being received or an ARQ link is in progress (including a PHASE operation), returning low only when the unit has returned to STANDBY. The SCAN line can therefore be used in conjunction with a multiple-channel radio receiver to scan through a number of channels. The characteristics of this feature are such that

only 660mS "dwell" time on each channel is sufficient to guarantee synchronisation with any clean signal.

ALIGNMENT

The AMT-3 has been accurately aligned in the factory, and it should need no internal adjustments other than those already covered in the SETUP section. This section describes the method of adjustment of the remaining internal pre-set controls, to cover the possibility that mis-alignment is suspected.

A frequency counter with 6-digit resolution and 10ppm accuracy is needed.

Crystal trimmer (C33)

Connect the counter to measure the frequency on pin 40 of U4. Adjust trimmer C33 until this frequency is 1228.80 kHz.

Receive centre-frequency (RV4)

Carry out the procedure described under TEST 0 of the COMMANDS section.

Transmit tone generator (RV1)

Carry out the procedure described under TEST 1.

Transmit tone generator (RV2)

Carry out the procedure described under TEST 2

Transmit Delay

Although not part of AMT-3 alignment, the setting of the DELAY parameter to the requirements of a particular transmitter/receiver combination using an oscilloscope is given here.

The transmitter should first be connected to a dummy load. Connect the oscilloscope so as to display the RF output across the dummy load. Use an external trigger from the transmitter switching line (PTT). The oscilloscope should be set for negative-slope trigger, and a timebase speed of 10mS per division. Enter the command DELAY 00, then enter ARQ XXXX. Note the time interval, in mS, on the oscilloscope between the trigger point and the point where the RF output has just reached it's maximum level. Now enter ESCAPE and set DELAY to this value.

Although a longer setting will give equally good results at short and medium distances, remember that the longer the DELAY setting, the shorter becomes the maximum distance over which an ARQ link is possible. This maximum distance reduces by 150km for every mS increase in the delay setting.

AMTOR OPERATING PROCEDURES

Calling Channels

AMTOR operators have agreed on the use of certain informal, but internationally recognised calling channels. Stations commonly transmit their CQ or other general broadcast calls on these calling frequencies. They can also be used to initiate an ARQ contact if the receiving station is known to be monitoring the channel.

After initial contact is made, both stations involved in the contact must move off to another channel to continue their communication.

The calling channel should not be used as a working channel, or for testing or lengthy conversations! Automatic beacon transmissions should not be initiated on the calling channel.

Computer based message storage or mailbox systems operating on these calling channels should provide automatic means of QSYto relocate both the calling station and the mailbox to another channel after initial contact has been established. Thus, leaving the calling channel free for other stations. many long established mailboxes operate in this way, and you will soon become familiar with them.

The Channels

Band	Channels (kHz)
80 meters	3588, 3637.5 (USA)
20 meters	14075
15 meters	21075
10 meters	28075

AMTOR OPERATING NOTES

Legalities

Establish before operating whether you are authorised to do so. Most countries where there is currently AMTOR activity are permitted by general licence regulations. Some countries require the licensee to apply for a special permit. Some countries do not permit AMTOR. In others, stations are simply active!

Getting started on AMTOR for the first time

The most popular AMTOR mode is ARQ, since it is the most effective. However, do not attempt to make the first QSOs on ARQ until FEC has been tested and is known to be working. If there is a fault in part of the system, no contact will result on ARQ at all, whereas, if at least one direction (transmit or receive) is working, faults can be identified and cured with contact in FEC. The following step-by-step procedure will assist in finding faults during commissioning a new AMTOR station:-

- Check FEC receive first, with a known distant station sending in the correct shift-polarity. This will confirm the station receiver is working, and in the correct shift-polarity.
- Check FEC transmit next, asking a distant receiving station to confirm that the transmit shift-polarity is correct.
- Make a short transmission with an ARQ call, asking the distant station to use 'listen' or 'monitor'; mode to check that the transmitter keying is functioning correctly. The most common fault at this stage is a too-slow changeover from receive to transmit, resulting in missing transmitted data at the start of the burst.
- The AMT-3 has a delay adjustment which may allow slow transmitters to be used successfully except for very long distance contacts. Some remedial work may be required on the radio if this test fails.
- If the above is successful, ask the distant station to make an ARQ call to your Selcal. Your station should respond and an ARQ contact should result.
- Finally, make an ARQ call to the distant station and attempt an ARQ contact with your station as master rather than, as above, as a slave. If no contact results, yet the distant station indicates that he was replying to the call, then the problem is that the radio is too slow to change from transmit to receive. Remedial work may be required to correct this. No adjustment to the 'delay' preset in the AMT-3 will cure this problem. Consult the supplier of your radio if remedial work is needed.

It is important to follow these steps in order. Unnecessary confusion, frustration, and interference can result from a premature attempt to start an ARQ contact where the complete contact cannot be made because all the component parts of the system are not working correctly.

AMTOR operating techniques

AMTOR is sufficiently different from other modes that some of the operating practices traditionally used on the air are no longer ap-

propriate. Some new techniques peculiar to AMTOR require explaining.

FEC and ARQ: When to use them

ARQ is well-known to be the better of the two, but there are several situations where FEC has its advantages, and some where its use is essential.

- Use ARQ for all two-way contacts
- Use FEC for all multi-way contacts
- Do not use ARQ for CQ calls.

There are several reasons for this:

- Listeners cannot identify the calling station in an ARQ CQ call. Thus they either must risk replying to a station with whom contact was not desirable, or suffer the embarrassment of having to terminate a contact if, for example, it turns out to be the station you have just worked.
- If a contact which resulted from a CQ call on ARQ subsequently runs into a re-phasing atempt, the resultant CQ call from the master station may attract a completely new reply from a third station, thus resulting in this new station 'stealing' the contact.
- FEC will have to be used if the distance between the two stations is longer than about 22,000 miles, such as in 'long path' contacts which travel more than halfway round the globe, or some high orbit satellite contacts. Make sure you know in advance if the path you are attempting is in this category. Do not attempt ARQ under these conditions. It is very frustrating to be called on ARQ when it is known that the path is too long, and very difficult to attract the attention of the caller to the problem.

Starting an AMTOR QSO

There is no need to explain how to start an FEC QSO, since the technique is identical to that on other modes. However, in ARQ mode it is necessary to know the other station's Selcal code before calling him. New techniques must therefore sometimes be used.

If the other station's Selcal code is already known, as in the case of a 'sked', then there is no problem. Simply enter the required Selcal code to the AMT-3. If the desired station is on frequency, he will reply and the contact can proceed. If tail-ending on a previous contact, and the intention is to call one station on ARQ and his Selcal code is not known, then there are two ways to proceed:-

- There is a convention in operation amongst AMTOR operators in respect of the way to choose the station Selcal code from the station call sign. This is to choose the first letter of the call sign, followed by the last three let-

ters, ignoring completely any figures. In the case of call signs with only three letters, the first letter is repeated twice. This rule breaks down for call signs in which the prefix contains figures. However, if the call sign of the desired station can be translated into a Selcal code in this way, then use that Selcal code to call him after he signs off with the station he is working.

– If his call sign cannot be encoded in the above way, or his call sign is not known, or he does not respond to the expected Selcal code, then call him in FEC mode, giving him the choice of calling you back on your Selcal code, or asking him to tell you what Selcal code he is using. Note that some stations who may be using commercial SITOR-type units, may not always be able to make ARQ calls to all possible combinations of letters in a Selcal. They thus may require that you call them with a Selcal code that bears no relationship to their call sign, being in fact a translation from a telex number associated with the commercial equipment.

Operating techniques whilst in contact in FEC

To make a CQ call to initiate an AMTOR QSO, do so on FEC mode, mentioning your own Selcal code so that, at the end of your call, a prospective QSO partner can call you back directly with your Selcal. If you are expecting replies only on FEC (for example for contacts via a long path), mention this fact in the CQ call.

Whilst operation in FEC is very similar indeed to that of conventional RTTY, there are two points to note, both related to the method by which the FEC receiver synchronises to the distant transmitter.

- Since the receiver can only synchronise to the transmitter when it is not sending traffic (that is, idling) each transmission must start with a period of idling. Most AMTOR units will ensure that a short period of idle precedes the typed message. Under poor conditions, extra idles should be sent, both at the beginning of the transmission, and also at intervals during the transmission. Otherwise, interference may have resulted in the distant receiver losing sychronisation. Note that the practice common on conventional RTTY of transmitting a line of test message of RYRYRY to allow the distant station to tune in, is actually counterproductive on FEC. The distant receiver will not synchronise until the end of this test sequence, and the idle-signal itself is quite suitable itself for tuning purposes.
- Some commercial SITOR-type units require a received FEC transmission to start with a carriage return and/or a line feed signal. For this reason, and to aid the formatting of any distant printer's copy, always start an FEC transmission on a new line.

Operating techniques in ARQ mode

Transmitter and receiver tuning

An ARQ contact always starts with the master station making the initial call, and the slave replying. Thus the frequency will have been chosen by the master station, and the slave station will have tuned onto that. It often happens that an offset at either station will then result in the signal from the slave received at the master being slightly off tune. If the master station readjusts his transceiver main tuning dial to remedy this error, he will also offset his transmitter. This will probably put his signal off tune in the distant slave's receiver. A never ending series of adjustments could then take place.

The equivalent problem on other modes rarely causes trouble since the retune operations only take place each time the transmission is passed from one station to the other. With the 'quick-break' operation of ARQ, such off-sets can cause trouble. A convention has thus been adopted among AMTOR operators to prevent this situation arising.

The convention is that the master station must at all times keep his transmitter frequency constant. Thus, if the master finds that the slave signal is not correctly tuned, he must adjust only his receiver frequency to remove the error, leaving his transmitter frequency untouched. He should use only the RIT control on the transceiver. The slave station may, if he finds his receiver off tune, make a correction by adjusting both receiver and transmitter frequencies together by means of the main tuning dial.

This prevents any offset from accumulating. It is the frequency domain analogue of the time domain synchronisation in which the master station clock determines the phasing for the contact.

Changing frequency during an ARQ QSO

Since both stations are listening through, if there is some interference on the frequency, or if a change of frequency is desirable for some other reason (for example, to clear a calling frequency), then both stations may wish to move together to another frequency. Whilst at first there may seem to be no reason to discuss such a simple operation, there are problems if a QSY is made incorrectly in ARQ, and there are advantages in adopting a specific technique:

- The easiest way to QSY in an ARQ QSO is to close down, and restart on the new frequency, with the master station choosing the new frequency. This is referred to in AMTOR circles as a 'cold' QSY. This technique is the preferred one when moving off a calling frequency, and in all conditions where there is good copy between both stations.
- If the QSY is forced because of interference, then another technique is possible, and if carried out in the right way, can have decided advantages. If carried out wrongly, it can cause

problems and offence to other band users. This is referred to as the 'HOT' QSY technique.

To hot QSY, the master station, whilst in the re-phasing mode, moves off the old frequency to the new one, and the slave follows. It is important for the master station to prevent his transmitter from radiating during this operation, in order to prevent unintentional interference to other band users. He should also disable the connection between the receiver and the AMTOR terminal unit, in order to prevent unintentional 'phantom sync.' to any other ARQ signals which may be audible. It can only be the master station that leads in a 'hot' QSY. If the slave station were to attempt to lead a QSY, then, in the event that it was not successfully completed before the contact timed-out into a re-phase operation, the slave would no longer be transmitting, and there would be no way for the slave to establish a new frequency without restarting as master and losing some traffic.

Fixed channel working

It is possible to leave an AMTOR station in 'standby' mode on a given channel, and for another station to make a specific call to that station on the chosen frequency. The question arises as to what exactly is the "frequency" of an AMTOR emission. There are, unfortunately, two different conventions in use: One more commonly used in amateur circles; the other used universally by all non-amateurs.

- The 'amateur' convention says that an AMTOR signal (and indeed any FSK signal) is specified with reference to the frequency of the higher-frequency tone in the pair. Thus, if a sked is prearranged to occur on 14075 kHz, this is taken to mean that the two transmitted tones are on 14075.00 and 14074.83 kHz.
- The 'commercial' convention (increasingly used by amateurs), says that the signal is specified with respect to the frequency of the imaginary centre-channel. A signal said to be on 21100 kHz, will have one tone on 21099.915 kHz and the other on 21100.085 kHz (85 Hz either side of the nominal, rather than with one tone on, and the other tone 170 Hz below, the nominal). Note that it is assumed that the frequency shift is 170 Hz.

In any specification of a 'frequency' in connection with AMTOR working, due regard must be taken of the convention intended - at least until such time as one of these conventions is dropped in favour of the other.

Another significant factor with respect to the setting frequencies on SSB transceivers used on AMTOR with AFSK is as follows. Since the tones will result in transmissions which are offset from the supressed carrier frequency, the dial (which normally indicates the suppressed carrier frequency), will not read correctly. It will be necessary to add or subtract a fixed correction in order to establish the actual frequency in use. For example, if the transceiver is in use on lower sideband, with audio tone frequencies of 2125 and 2295 Hz, then, to operate on

an amateur frequency of 14075 kHz, the transceiver dial must be set to 14077.125, that is, 2125 kHz higher than the desired frequency. The two radiated tones will then be on 14077.125 -2.125 (14075) and 14077.125 -2.295 (14074.83). Other offsets must be used if a 'commercial' channel is to be set up (2210 Hz). The offset will be in the other direction if upper sideband is used. This must be re-calculated if the tone frequencies are different from those quoted.

Users of transceivers with an FSK connection must consult their transceiver handbook to establish whether an offset has to be applied to the dial frequency. Even if the transceiver supplier indicates that no offset is needed, it will be necessary to establish whether the 'amateur' or 'commercial' convention is implied.

Use of the 'over' or 'break-in' facility

In ARQ mode, it is possible to use the 'over' or break-in' facility, to interrupt the sending of the other station. This facility should be used with care, and only where it is essential to do so. There are inherent reasons why recovery from such an interruption can result in garbled copy at one end of the contact.

If possible, wait until the other station is idling before breaking in. If the other station breaks in to your transmission, it will probably help to use the 'clear buffer' facility (Control-X) to abort the transmission of any unsent text which would be inappropriate to the new context of the break-in.

The Shift Key

The AMTOR alphabet, like the RTTY alphabet, consists of two sets of 30 characters, with a switch made between them by two 'shift' or 'case' codes. One inherent result of this technique is that it is often not known which shift the distant receiving station is in at the start of the contact. For this reason it is always good practice to send the appropriate shift code at the start of each contact and even at the start of each message, or at more frequent intervals still. On the AMT-3, this sending of the shift code is done automatically, and is hidden from the user.

Since the distant terminal could still nevertheles be in the wrong shift, there will always be the requirement to send the shift code at the start, to prevent the distant receiver copying the first part of the text in the wrong shift. To prevent this, always start with a CRLF.

AMTOR BASIC THEORY

Teleprinter communication over radio links has always been achieved via frequency shift keying of the transmitter carrier frequency: The higher frequency representing one logic level and the lower, the other. In traditional RTTY, 32 characters are transmitted serially and are preceeded by a start bit which synchronises the receiver decoding. It is separated from the following character by a stop bit. This system (although usually generated and decoded in modern equipment electrically), was originally designed to be decoded mechanically, and suffers from problems when used on radio links which are subject to fading and interference.

In AMTOR, steps are taken to ensure that an error in the received signal does not necessarily cause an error in the outputted character. This is achieved by transmitting extra information along with the data to enable the distant receiver to detect the presence of errors. Instead of 5 data bits, 7 are transmitted. Three bits are of one polarity and four are of the other. The vast majority of randomly occurring errors result in this 3:4 ratio being altered at the receiver. This enables the receiving station to detect that the data is erroneous.

There are 35 such combinations of 7 bits, and 32 of these are translated directly to the standard RTTY character set. Others are used as special control characters. The start-bit mutilation problem is over come by transmitting the data bits synchronously at accurately controlled intervals. The synchronisation at the receiver is achieved by accurately controlled timing, rather than by using a start bit.

There are two different types of communication available in TOR. Forward Error Correction (FEC), and Automatic Request (ARQ). In FEC, the 7 bit characters are transmitted twice. The receiving station can choose which of the two passes the 3:4 ratio test. Up to half of the received codes can therefore be in error before errors occur in the output. The second transmission of each character is delayed relative to the first, so that a prolonged fade or burst of interference will only result in one transmission of several characters being mutilated, rather than both transmissions of a few adjacent characters.

Even if both transmissions are mutilated, the receiving station prevents an erroneous character being printed, supressing the character completely and signalling the presence of the error via the ERROR lamp.

In ARQ mode, the transmitter sends a group of three 7-bit characters in a block. The distant receiver examines each one, and if any contains an error, the receiving station sends a repeat request character to the transmitting station. In this way interference or fading does not generally result in errors, but merely a slowing down of the transmission of information each time a repeat is requested. Data blocks and

control codes are transmitted back and forth by the two stations working in quick break fashion, usually on the same frequency. This gives rise to the familiar chirp-chirp-chirp of AMTOR signals on the air.

In both FEC and ARQ modes, accurate synchronisation is essential between both ends of the link. This is achieved by means of special phasing signals transmitted at the start of each contact, and maintained by crystal controlled timing.

In practice, it is possible for errors to occasionally beat the 3:4 ratio check, and result in printed errors. Nevertheless, FEC is considerably better than conventional RTTY, and ARQ is very much better than FEC. The reason for including both FEC and ARQ features is that ARQ can only be used between two co-operating stations, whereas FEC can be transmitted by one station to any number of others. Thus FEC is often used for broadcast messages such as news bulletins and CQ calls.

In the ARQ mode, it is necessary to know the identity of the other station before establishing the contact. Hence FEC is often used at the start of a contact, followed by a change to ARQ. The requirement to identify the intended ARQ contact first arises from the initial process which is required at the start of the contact. This feature also enables the ARQ mode to be used to selectively contact one particular station amongst a number who may be monitoring a common frequency.

As well as providing the facility to transmit and receive FEC signals and make or receive calls in ARQ mode, the AMT-3 has a facility to enable it to monitor one side of an ARQ contact between two other stations. This ability is not inherent in the ARQ system itself, but is included since it is always interesting to be able to listen-in to other contacts.

TRANSCEIVER CHANGEOVER PERFORMANCE

In ARQ mode, a reasonably fast changeover from transmit to receive and vice versa is essential. If your transceiver takes longer than 100 mS to change from receive to transmit, it will not be possible to find a setting for DELAY that will allow the AMT-3 to operate in ARQ mode correctly.

Even if the changeover time is less than 100 mS and it is possible to set the DELAY, it may be necessary to modify the transceiver to shorten the delay time as much as possible in order to permit very long distance ARQ contacts.

The shorter the delay time, the greater will be the maximum distance that can be worked in ARQ mode. This is because radio waves take a finite time to travel and the ARQ mode allows a maximum of 170mS for the radio signals to travel from one station to the other and back. Since radio waves travel at 300 km per mS, if there were no other delays, this would give a maximum distance from one station to another and back of 170 x 300 km. That is 25,500 km between them. The ARQ mode cannot work at a greater distance than this. Any additional delays will reduce this range. It is for this reason that the shortest possible changeover delay is advantageous.

With changeover delays of 10mS at both ends, it is just possible to work from one point of the globe to its antipodeal point.

Most transceivers perform well in this respect, especially the more modern ones which are noted for fast break-in CW. However, some require small modifications to be able to change over faster.

If you have a problem in this respect, the first approach is to contact your transceiver dealer. He may already have details of the necessary modifications and can either carry them out or supply the necessary modification kit or information. In the absence of such help, contact ICS Electronics Ltd., who may already be aware of modifications for your transceiver. As a last resort, obtain the service handbook or circuit diagram of your transceiver, and, with the aid of an oscilloscope, trace the path taken by the signal from the microphone socket through to the transmitter output, sychronising the scope from the PTT line, and observing the time interval immediately after the PTT line goes low - looking for any source of excessive delay.

It is often found that excessive delays occur due to the charging up of large capacitors - either those bypassing supply lines that are switched on or off between receive and transmit, or those coupling signals between stages that are operating from differently switched supply lines.

The cure is usually to reduce the value of the offending capacitor. In some cases, it may be possible to move part of the circuitry (for example the microphone pre-amplifier), from a supply line that is switched, to one that is not, without affecting the performance of the transceiver. Experience has shown that the speed of operation of relays is normally quite adequate, except possibly some very large relays in high power amplifiers.

The speed of changeover from transmit to receive is also important in ARQ mode. This is mainly for a station making the initial call when working a nearby station - when the reply has to be received very soon after the end of the transmit burst.

If problems are encountered when trying to initiate such a contact, but not when the other station initiates the call from his end, then suspect that the receiver is taking too long to switch back to full gain after the transmitter burst. Again, the transceiver dealer, manufacturer, or ICS Electronics Ltd. may be able to provide the solution.

To define the problem, a similar analysis technique to that used for the transmitter may be used, but this time triggering the oscilloscope from the trailing edge of the PTT signal and tracing the signals through the receiver.

Look for the effects of large capacitors in decoupling, coupling, or AGC positions. It is also possible that some relays may be slow to drop back to the receive condition if a diode is connected across the relay coil to supress back EMF spikes. This has the effect of slowing the drop out of the relay. The cure is to add a resistor in series with the diode with a value equal to that of the relay coil impedence.

Code Translation Tables

CODE	CHAR	RTTY	AMTOR	CW
0	Null	00000	0101011	
	(Codes 1 to 9 not programmed)			
10	L/F	00010	0011011	
	(Codes 11 and 12 not programmed)			
13	C/R	01000	0001111	
	(Codes 14 to 31 not programmed)			
32	SPACE	00100	0011101	
33	!			-.-.-
34	"			.-..-.
35	#	00101	1001011	...-.-
36	$	10010	1100101	
37	%	10110	1101100	
38				
39	'	10100	1101001	.----.
40	(	11110	0111100	-.--.
41	)	01001	1010011	-.--.-
42	*	11010	1110100	.-.-.
43	+	10001	1100011	...-.
44	,	00110	1001101	--..--
45	-	11000	1110001	-....-
46	.	00111	1001110	.-.-.-
47	/	10111	0101110	-..-.
48	0	01101	1011010	-----
49	1	11101	0111010	.----
50	2	11001	1110010	..---
51	3	10000	0110101	...--
52	4	01010	1010101	....-
53	5	00001	0010111	.....
54	6	10101	1101010	-....
55	7	11100	0111001	--...
56	8	01100	1011001	---..
57	9	00011	1000111	----.
58	:	01110	1011100	
59	;			-.-.-.
60				

CODE	CHAR	RTTY	AMTOR	CW
61	=	01111	0011110	-...-
62				.-...
63	?	10011	0100111	..--..
64	@	01011	1010110	
65	A	11000	111001	.-
66	B	10011	0100111	-...
67	C	01110	1011100	-.-.
68	D	10010	1100101	-..
69	E	10000	0110101	.
70	F	10110	1101100	..-.
71	G	01011	1010110	--.
72	H	00101	1001011	....
73	I	01100	1011001	..
74	J	11010	1110100	.---
75	K	11110	0111100	-.-
76	L	01001	1010011	.-..
77	M	00111	1001110	--
78	N	00110	1001101	-.
79	O	00O11	1000111	---
80	P	01101	1011010	.--.
81	Q	11101	0111010	--.-
82	R	01010	1010101	.-.
83	S	10100	1101001	...
84	T	00001	001011	-
85	U	11100	0111001	..-
86	V	01111	0011110	...-
87	W	11001	1110010	.--
88	X	10111	0101110	-..-
89	Y	10101	1101010	-.--
90	Z	10001	1100011	--..
91	[			.-.-
92	\			---.
93	]			.--.-
94				
95				
96				

CODE	CHAR	RTTY	AMTOR	CW
97	A	11000	111001	.-
98	B	10011	0100111	-...
99	C	01110	1011100	-.-.
100	D	10010	1100101	-..
101	E	10000	0110101	.
102	F	10110	1101100	..-.
103	G	01011	1010110	--.
104	H	00101	1001011	....
105	I	01100	1011001	..
106	J	11010	1110100	.---
107	K	11110	0111100	-.-
108	L	01001	1010011	.-..
109	M	00111	1001110	--
110	N	00110	1001101	-.
111	O	00O11	1000111	---
112	P	01101	1011010	.--.
113	Q	11101	0111010	--.-
114	R	01010	1010101	.-.
115	S	10100	1101001	...
116	T	00001	001011	-
117	U	11100	0111001	..-
118	V	01111	0011110	...-
119	W	11001	1110010	.--
120	X	10111	0101110	-..-
121	Y	10101	1101010	-.--
122	Z	10001	1100011	--..
123				
124				
125				
126				
127				

CODE	CHAR	RTTY	AMTOR	CW
97	A	11000	1110001	.-
98	B	10011	0100111	-...
99	C	01110	1011100	-.-.
100	D	10010	1100101	-..
101	E	10000	0110101	.
102	F	10110	1101100	..-.
103	G	01011	1010110	--.
104	H	00101	1001011	....
105	I	01100	1011001	..
106	J	11010	1110100	.---
107	K	11110	0111100	-.-
108	L	01001	1030011	.-..
109	M	00111	1001110	--
110	N	00110	1001101	-.
111	O	00011	1000111	---
112	P	01101	1011010	.--.
113	Q	11101	0111010	--.-
114	R	01010	1010101	.-.
115	S	10100	1101001	...
116	T	00001	0010111	-
117	U	11100	0111001	..-
118	V	01111	0011110	...-
119	W	11001	1110010	.--
120	X	10111	0101110	-..-
121	Y	10101	1101010	-.--
122	Z	10001	1100011	--..
123				
124				
125				
126				
127				

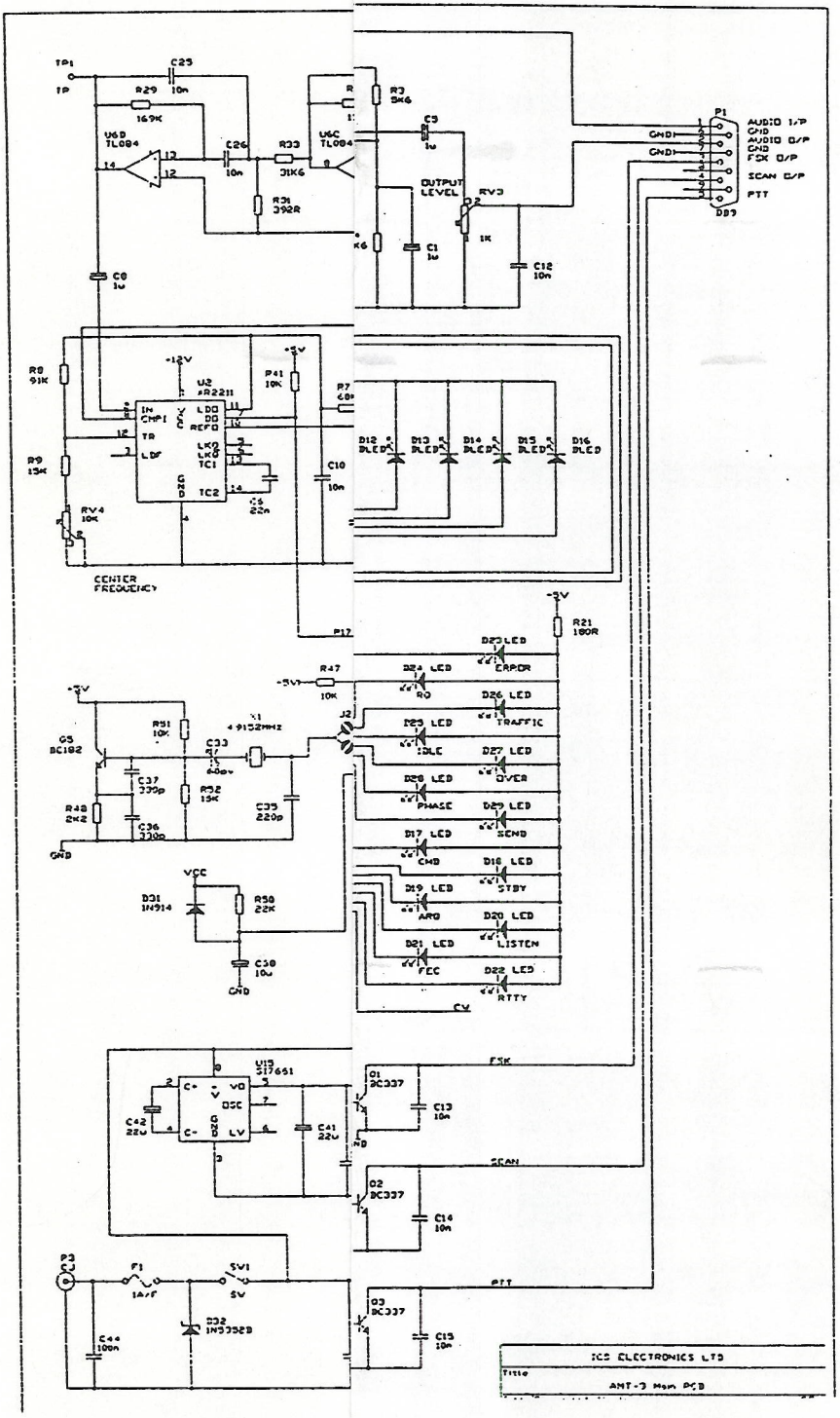
TP1
TP
C25
10n
R29
169K
U6D
TL084
C26
10n
R33
31K6
R31
392R
U6C
TL084
R3
3K6
C9
1u
OUTPUT
LEVEL
RV3
1K
C1
1u
C12
10n
C8
1u
P1
AUDIO I/P
GND
AUDIO O/P
GND
FSK O/P
SCAN O/P
PTT
DB9
R8
91K
R9
15K
RV4
10K
CENTER
FREQUENCY
+12V
U2
XR2211
IN
CMPI
LDO
DO
REFO
TR
LDF
LKO
LKO
TC1
TC2
GND
C6
22n
C10
10n
+5V
P41
10K
P7
D12 LED
D13 LED
D14 LED
D15 LED
D16 LED
P17
-3V
R21
180R
D23 LED
ERROR
D24 LED
RO
D26 LED
TRAFFIC
D25 LED
IDLE
D27 LED
OVER
D28 LED
PHASE
D29 LED
SEND
D17 LED
CMD
D18 LED
STBY
D19 LED
ARQ
D20 LED
LISTEN
D21 LED
FEC
D22 LED
RTTY
CV
R47
10K
+5V
+5V
Q5
BC182
R51
10K
X1
4.9152MHz
C33
R52
15K
C37
330p
R48
2K2
C36
330p
C35
220p
J2
GND
VCC
D31
1N914
R50
22K
C30
10u
GND
U15
ST661
C+
V
VO
OSC
GND
LV
C42
22u
C41
22u
FSK
Q1
BC337
C13
10n
SCAN
Q2
BC337
C14
10n
PTT
Q3
BC337
C15
10n
P3
F1
1A/F
SW1
5V
D32
1N5352B
C44
100n
ICS ELECTRONICS LTD
Title
AMT-3 Main PCB

AMT-3

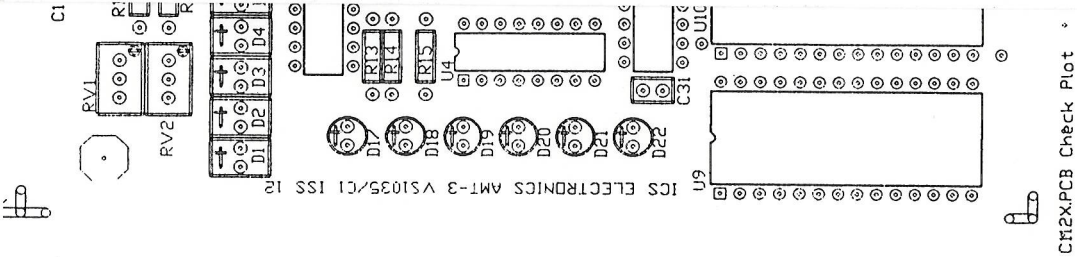
ICS ELECTRONICS AMT-3 V51035/C1 ISS 12
C1
RV1
RV2
D1
D2
D3
D4
R13
R14
R15
U4
D17
D18
D19
D20
D21
D22
C31
U9
CM2X.PCB Check Plot

ICS Electronics Ltd

Unit V,
Rudford Industrial Estate,
Ford,
Arundel,
West Sussex BN18 0BD
England

Telephone: 0903 731101
Facsimile: 0903 731105

Technical Hot Line
0903 714667